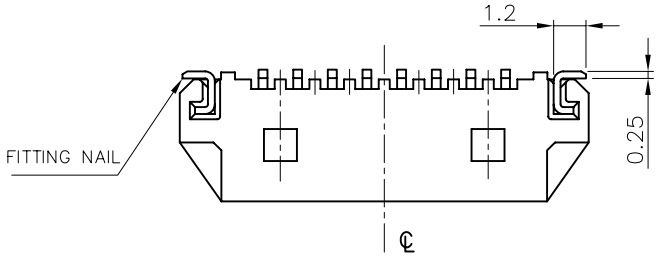

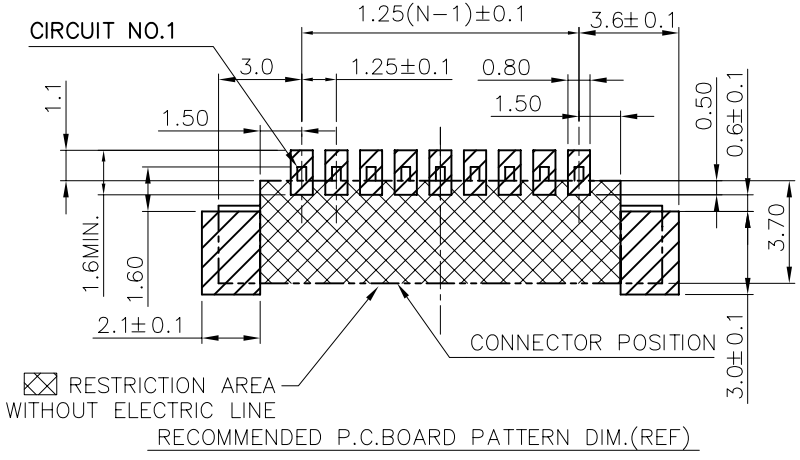

RECOMMENDED P.C.BOARD PATTERN DIM.(REF)

NOTES:
1. MATERIAL:
   1.1 HOUSING: HALOGEN FREE PLASTIC, HIGH TEMP.,UL94V−0.
   1.2 CONTACT: COPPER ALLOY
   1.3 FITTING NAIL:COPPER ALLOY
2. FINISH:
   2.1 TERMINAL:
      CONTACT
         UNDERPLATING:50u"MIN NICKEL OVERALL.
         1:GOLD FALSH ON CONTACT AREA
      SOLDER
         UNDERPLATING:50u"MIN NICKEL OVERALL.
         GOLD FALSH ON SOLDER AREA
   2.2 FITTING NAIL:
         UNDERPLATING:50u"MIN NICKEL OVERALL.
         100u"Min MATTE TIN ON SOLDER AREA
3. REFLOW SOLDER CAPABLE TO 260°C
   PER ACES SPEC.
4. SPEC. PLS. REFER TO PS−50273−xxxxx−xxx
5. PACKAGE PLS. SEE P/N LEGEND
6. APPLY EVEN CIRCUIT PRODUCTS.
7. LOCKING WINDOW:ONE PLACE FOR 2&3 CKTS.
   TWO PLACES FOR MORE THAN 4 CKTS.

P/N LEGEND

51311−XXX X X−XXX

NO OF CKT

PACKING
7:TAPE & REEL WITH COVER

PLATING
1:GOLD FLASH

XXX	Material&Color	PACKING
001	HF&Black	85205-xxxx-C-TRP

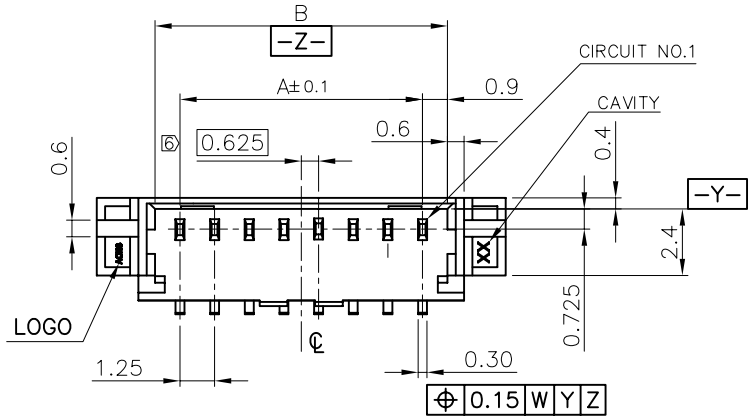

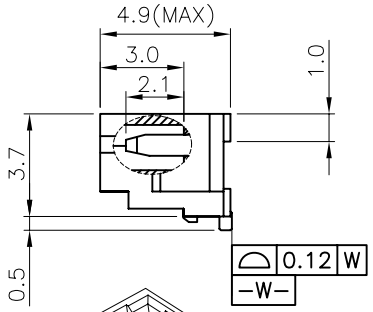

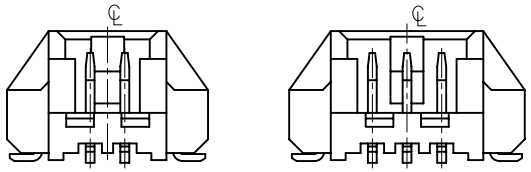

2 PIN 3 PIN

7 LOCK CONFIGURATION

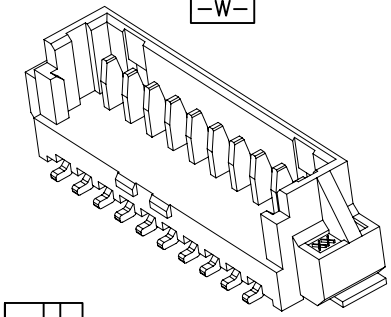

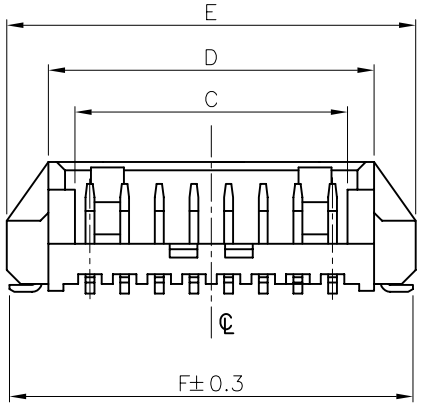

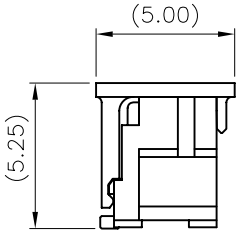

WITH COVER

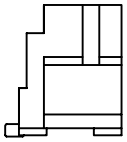

WITHOUT COVER

CKT	Dim A	Dim B	Dim C	Dim D	Dim E	Dim F
7	7.50	9.30	8.60	10.50	13.50	13.40
10	11.25	13.05	12.35	14.25	17.25	17.15

一般公差
TOLERANCES
X. ±0.5 .XX ±0.15
.X ±0.25 .XXX ±0.1
ANGLES ±2°

宏致電子股份有限公司
Aces Electronics Co.,Ltd.

檢驗尺寸標示
SYMBOLS (C) (M) INDICATE CLASSIFICATION DIMENSION
(C) MARK IS CRITICAL DIM.
(M) MARK IS MAJOR DIM.

品名 (TITLE): 1.25mm S/T WIRE TO BOARD SMT TYPE

圖號 (DWG.NO): 51311−XXXXX−XXX

製圖 (DR): '17/09/28 Chai,Yunhe

審核 (CHKD): BRAVE

核准 (APPD): BRAVE

表面處理 (FINISH): ——

比例 (SCALE): 5:1

單位 (UNITS): mm

張數 (SHEET): 1 OF 1

SIZE: A4

REV: A